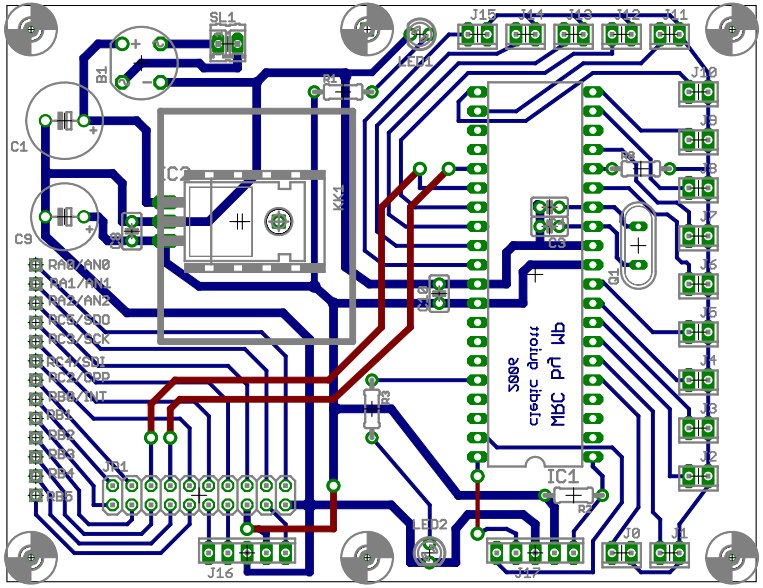
SL1
B1
C1
C9
IC2
KK1
LED1
LED2
IC1
JP1
J16
J17
J0
J1
J2
J3
J4
J5
J6
J7
J8
J9
J10
J11
J12
J13
J14
J15
RA0/AN0
RA1/AN1
RA2/AN2
RC5/SDO
RC3/SCK
RC4/SDI
RC2/CPP
RB0/INT
RB1
RB2
RB3
RB4
RB5

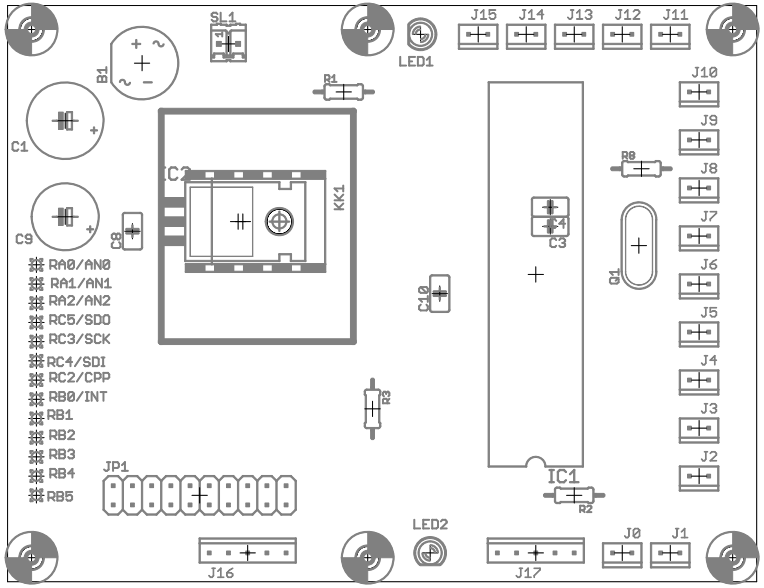
SL1
B1
C1
C9
C8
IC2
KK1
LED1
LED2
IC1
JP1
J16
J17
J0
J1
J2
J3
J4
J5
J6
J7
J8
J9
J10
J11
J12
J13
J14
J15
RA0/AN0
RA1/AN1
RA2/AN2
RC5/SDO
RC3/SCK
RC4/SDI
RC2/CPP
RB0/INT
RB1
RB2
RB3
RB4
RB5

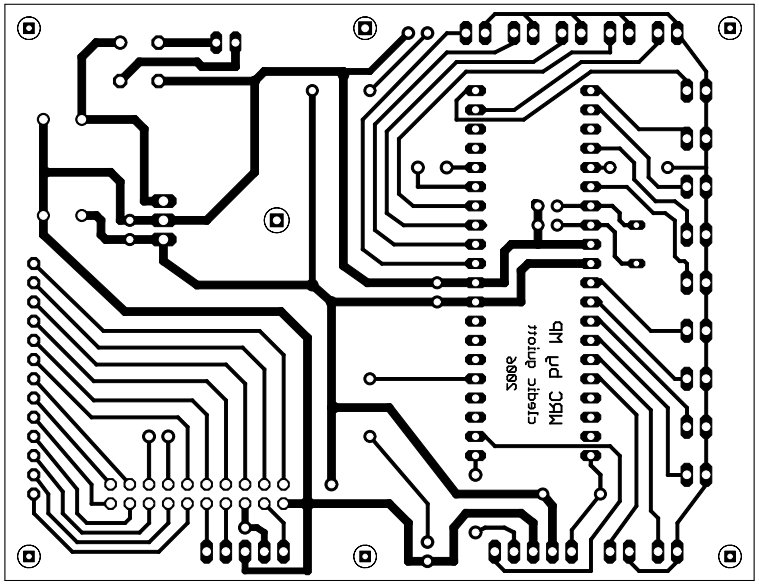

Bottom

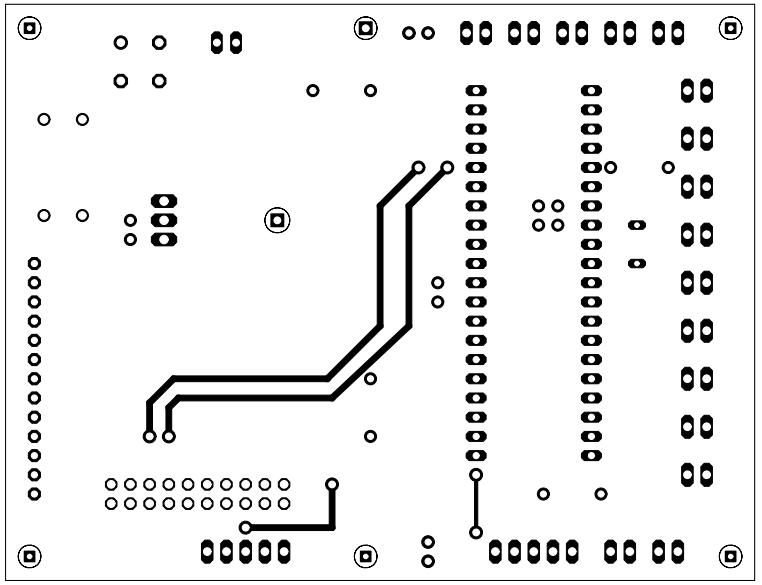

Top